AW SERIES · AIR-TO-WATER HEAT PUMPS

DanVex AW-15M3

Air-to-water heat pump · 15 kW · three-phase



Air-to-water heat pumps for detached-home and villa heating, cooling and domestic hot water, and for replacing gas or oil boilers — efficient year-round comfort from a single outdoor unit.

A monoblock design keeps all refrigerant sealed in the outdoor unit, with Full Inverter operation, Blue Fin coating and R-32, delivering heating + DHW or cooling + DHW simultaneously.

Detached homes & villas | Commercial & office | Hospitality | Boiler replacement | Underfloor heating | DHW production

KEY FEATURES

- **Full Inverter system** — inverter compressor + EC fan + EEV; continuous modulation, COP up to ~4.3 at A7/W35
- **5 working modes + DHW to 60 °C** — Heating / Cooling / DHW / Heating+DHW / Cooling+DHW
- **Blue Fin coating, R-32** — anti-corrosion heat exchanger; low-GWP R-32 refrigerant, 4-way + 3-way DHW valves
- **Monoblock outdoor unit** — all refrigerant sealed in the outdoor unit; indoor connection is plumbing + power only
- **−25 °C operation** — cold-climate rated heating with auto-engaging backup electric heater (3–6 kW)
- **Wi-Fi + Modbus RTU RS-485** — app control and BMS integration; KNX via Modbus gateway

SPECIFICATIONS

Heating capacity range	**6.5–19.8 kW**
Heating A7/W35 (Cap · Power · COP)	**15.06 kW · 3.57 kW · 4.22**
Heating A2/W35 (Cap · Power · COP)	**13.60 kW · 3.39 kW · 4.01**
Heating A−7/W35 (Cap · Power · COP)	**11.70 kW · 3.61 kW · 3.24**
Heating A7/W55 (Cap · Power · COP)	**13.98 kW · 5.00 kW · 2.80**
Cooling A35/W7 (Cap · Power · EER)	**12.10 kW · 4.01 kW · 3.02**
ErP class (W35 / W55)	**A+++ / A++**
DHW max / rated	**60 °C / 55 °C**
Outdoor temperature	**−25 … +43 °C**
Power supply	**380–415 V 3-Ph**
Compressor	**Inverter, R-32**

Water flow rate	**2.6 m³/h**
Water-side pressure drop	**28 kPa**
Backup electric heater	**3 kW**
Connectivity	**Wi-Fi + Modbus RTU RS-485**
Sound pressure at 1 m	**56 dB(A)**
Dimensions (L×W×H)	**1120×480×1220 mm**
Package size (L×W×H)	**1180 × 540 × 1370 mm**
Net weight	**122 kg**
Gross weight	**152 kg**
Hydraulic components	**Built-in energy class A circulation pump · flow switch · 3-way DHW valve**
Working modes	**Heating / Cooling / DHW / Heating + DHW / Cooling + DHW**

© 2026 **DanVex** · Industrial & Professional Climate Control

DIMENSIONS & VIEWS

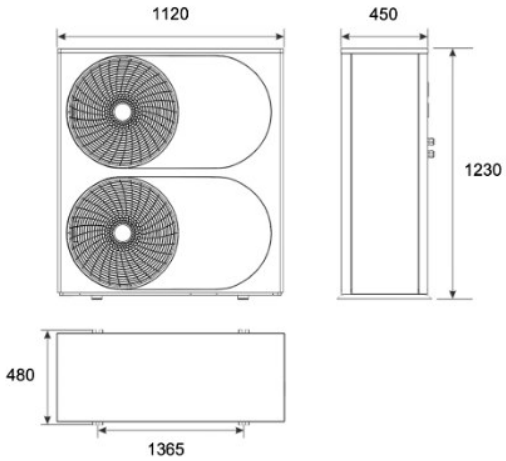

Dimensions in mm. Views: front, side and plan view of the monoblock outdoor unit.

UNIT L×W×H	PACKAGE L×W×H	NET / GROSS WEIGHT	WATER FLOW / PRESSURE DROP
1120×480×1220 mm	**1180 × 540 × 1370 mm**	**122 kg / 152 kg**	**2.6 m³/h / 28 kPa**

SCOPE OF SUPPLY

- Monoblock outdoor unit with factory refrigerant charge (R-32)
- Built-in circulation pump, flow switch, 4-way and 3-way (DHW) valves
- Backup electric heater
- Touch-screen controller with Wi-Fi and Modbus RTU RS-485

INSTALLATION & CONNECTIONS

Mounting	Outdoor monoblock unit on a level base or wall brackets with free airflow around the coil and fan; all refrigerant is factory-sealed inside the unit — no refrigerant piping or F-gas work on site.
Hydraulic connection	Flow and return water connections to the heating/cooling circuit and to the DHW tank via the 3-way valve; built-in circulation pump and flow switch. Water flow rate and pressure drop per the specification. Protect the water circuit against freezing.
Electrical supply	220–240 V 1-phase (M1 models) or 380–415 V 3-phase (M3 models). Dedicated circuit sized for the compressor and backup electric heater (3 or 6 kW); connection by a certified electrician.
Control & BMS	Touch-screen controller with built-in Wi-Fi and Modbus RTU RS-485; smartphone app for remote status and energy optimisation; KNX via Modbus gateway.
Operating limits	Heating at outdoor temperatures down to −25 °C with automatic backup heater; cooling at outdoor temperatures up to +43 °C; DHW up to 60 °C.

AW SERIES — MODEL RANGE

Parameter	AW-9M1	AW-15M1	AW-15M3	AW-20M3	AW-25M3
Heating capacity range	4.1–10.8 kW	6.5–19.8 kW	**6.5–19.8 kW**	9.0–26 kW	11.3–31 kW
Heating A7/W35 (Cap · Power · COP)	9.06 kW · 2.11 kW · 4.29	15.06 kW · 3.57 kW · 4.22	**15.06 kW · 3.57 kW · 4.22**	20.05 kW · 4.58 kW · 4.36	25.03 kW · 5.80 kW · 4.32
Heating A2/W35 (Cap · Power · COP)	8.10 kW · 2.02 kW · 4.01	13.60 kW · 3.39 kW · 4.01	**13.60 kW · 3.39 kW · 4.01**	17.60 kW · 4.49 kW · 3.92	22.00 kW · 5.58 kW · 3.94
Heating A−7/W35 (Cap · Power · COP)	5.71 kW · 1.82 kW · 3.14	11.70 kW · 3.61 kW · 3.24	**11.70 kW · 3.61 kW · 3.24**	14.50 kW · 4.51 kW · 3.22	17.40 kW · 5.35 kW · 3.25
Heating A7/W55 (Cap · Power · COP)	8.17 kW · 2.99 kW · 2.73	13.98 kW · 5.00 kW · 2.80	**13.98 kW · 5.00 kW · 2.80**	19.66 kW · 7.10 kW · 2.77	23.67 kW · 8.47 kW · 2.79
Cooling A35/W7 (Cap · Power · EER)	6.95 kW · 2.32 kW · 3.00	12.10 kW · 4.01 kW · 3.02	**12.10 kW · 4.01 kW · 3.02**	16.80 kW · 5.56 kW · 3.02	20.40 kW · 6.71 kW · 3.04
Power supply	220–240 V 1-Ph	220–240 V 1-Ph	**380–415 V 3-Ph**	380–415 V 3-Ph	380–415 V 3-Ph
Water flow rate	1.5 m³/h	2.6 m³/h	**2.6 m³/h**	3.4 m³/h	4.3 m³/h

Specifications, dimensions and drawings are subject to change without notice and may differ from the delivered unit; verify critical dimensions against the installation manual before design work. Heating and cooling performance at the test conditions indicated (outdoor air temperature / water outlet temperature).