DD SERIES · DUCTED DEHUMIDIFIERS

DanVex DD-240

Ducted dehumidifier · 220–260 L/day · Full Inverter · R-32



High-capacity ducted dehumidifiers for permanent installation where moisture control is continuous — indoor pool halls and spas, food production, warehouses and logistics hubs, indoor cultivation, manufacturing sites and museums.

Built into a heavy-duty concealed housing for ceiling voids and technical rooms, the unit operates standalone on a duct loop or integrates with central ventilation, with an inverter compressor and EEV holding humidity precisely.

Indoor pools & spas · Warehouses & logistics · Food production · Manufacturing · Indoor cultivation · Museums & archives

KEY FEATURES

- **Inverter compressor + EEV** — varies output continuously to match the moisture load; EEV meters refrigerant for circuit efficiency — no humidity swings, lower power
- **E-Coating heat exchanger** — immersion anti-corrosion layer over the whole fin surface; 360° protection
- **G4 + F7 filtration** — two-stage particulate filtration on the return airstream; F7 captures fine dust
- **Inverter fan** — holds airflow steady against duct resistance at low noise
- **Quiet operation** — pyramid-profile acoustic insulation lowers radiated noise; suitable for occupied and technical rooms
- **Wi-Fi + Modbus RTU RS-485** — app control and BMS/SCADA integration active simultaneously on every model

SPECIFICATIONS

Dehumidification	**220–260 L/day**
Supply airflow	**1900–2700 m³/h**
Return airflow	**1900–2700 m³/h**
External static pressure	**200 Pa**
Working humidity range	**45–100% RH**
Operating temperature	**+5 … +38 °C**
Voltage / Frequency	**380–415 V 3-ph / 50–60 Hz**
Fan	**Inverter-driven, variable speed**
Expansion valve	**EEV (electronic)**
Refrigerant	**R-32 × 1800 g**
Heat exchanger protection	**E-Coating**
Compressor	**Inverter, R-32**
Filtration	**G4 prefilter + F7 filter**
Defrost system	**Hot Gas Defrost**

Air purification	**UV Steriliser + Anion**
Air quality sensor	**5-in-1: CO_2 · PM2.5 · TVOC · RH · T°**
Rated power	**3040–4200 W**
Current	**4.6–6.4 A**
Noise level at 1 m	**< 48 dB(A)**
Return air duct	**500×400 mm**
Supply air duct	**350×350 mm**
Connectivity	**Wi-Fi + Modbus RTU RS-485**
Dimensions (L×W×H)	**1250 × 820 × 600 mm**
Package size (L×W×H)	**1300 × 850 × 730 mm**
Net weight	**119 kg**
Gross weight	**145 kg**
Condensate drain connection	**Ø 32 mm**

DIMENSIONS & VIEWS

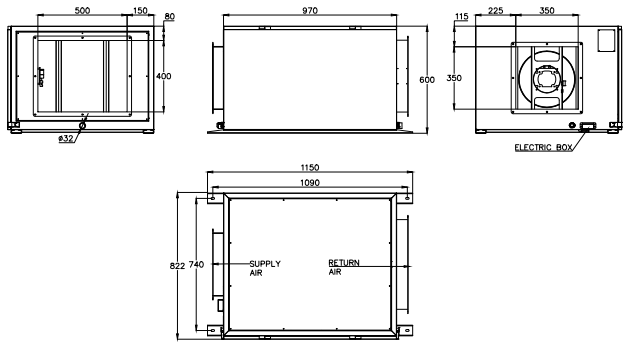

Dimensions in mm. Views: end panel with filtered return intake and Ø32 drain, side elevation, end panel with supply outlet and electric box, plan view with duct connections.

UNIT L×W×H	PACKAGE L×W×H	NET / GROSS WEIGHT	RETURN / SUPPLY DUCT
1250 × 820 × 600 mm	**1300 × 850 × 730 mm**	**119 kg / 145 kg**	**500×400 mm / 350×350 mm**

AIRFLOW DIAGRAM

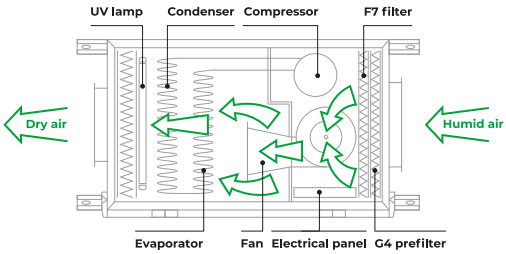

Airflow: humid return air passes the G4 prefilter and F7 filter, the fan, the evaporator (dehumidification), the condenser and the UV lamp, and is delivered as dry air through the single supply outlet.

SCOPE OF SUPPLY

- Ducted dehumidifier unit — G4 + F7 filters fitted; UV lamp, anion generator, 5-in-1 sensor, Wi-Fi and Modbus RTU RS-485 integrated; factory refrigerant charge (R-32)
- Digital touch-screen controller

INSTALLATION & CONNECTIONS

Mounting — Concealed installation in a ceiling cavity, plant room or technical space; powder-coated galvanised steel cabinet also permits installation outside the served room. Suspend from structure using the housing brackets and keep the unit level for condensate drainage. Leave access on the removable inspection-panel side.

Duct connections — One return-air intake and one supply outlet, rectangular (see specification table). The unit operates standalone on its own duct loop or integrated into the central ventilation system.

Condensate drain — Ø 32 mm drain connection on the end panel, positive-pressure drainage. Connect to a drain line with continuous fall (min. 1:50); no standing water in the unit or drain line.

Electrical supply — 380–415 V, 3-phase, 50–60 Hz. Dedicated circuit with protection sized per local code and the model current. Connection by a certified electrician.

Control & BMS — Digital touch-screen controller (setpoints, sensor readings, error diagnostics, filter timer). Modbus RTU RS-485 for BMS/SCADA; Wi-Fi for app control and monitoring. Auto-restart after power interruption. Modbus register map available on request.

Service — Maintenance through the removable inspection panel; filter-replacement timer alerts when service is due.

DD SERIES — MODEL RANGE

Parameter	DD-168	DD-240	DD-380	DD-480	DD-720	DD-960
Dehumidification	140–210 L/day	**220–260 L/day**	300–420 L/day	480 L/day	720 L/day	960 L/day
Supply airflow	1700–2200 m³/h	**1900–2700 m³/h**	3500–3850 m³/h	4800–5300 m³/h	7500–9000 m³/h	9000–11000 m³/h
Return airflow	1700–2200 m³/h	**1900–2700 m³/h**	3500–3850 m³/h	4800–5300 m³/h	7500–9000 m³/h	9000–12000 m³/h
External static pressure	200 Pa	**200 Pa**	200 Pa	200 Pa	400 Pa	400 Pa
Refrigerant	R-32 × 1600 g	**R-32 × 1800 g**	R-32 × 2500 g	R-32 × 2800 g	R-32 × 5000 g	R-32 × 8000 g
Rated power	1830–2520 W	**3040–4200 W**	4580–6246 W	9000 W	15000 W	21000 W
Current	2.7–3.8 A	**4.6–6.4 A**	6.9–11.6 A	16 A	26 A	37 A
Noise level at 1 m	< 45 dB(A)	**< 48 dB(A)**	< 50 dB(A)	< 55 dB(A)	< 55 dB(A)	< 55 dB(A)

Specifications, dimensions and drawings are subject to change without notice and may differ from the delivered unit; verify critical dimensions against the installation manual before design work. Dehumidification capacity measured at 30 °C / 80% RH.