DEH-WP SERIES · POOL DEHUMIDIFIERS, WALL / FLOOR

DanVex DEH-1200WP

Wall & floor inverter pool dehumidifier · 120 L/day



The DanVex DEH-1200WP is a professional inverter pool dehumidifier for the higher-capacity end of the wall- and floor-mountable range. At 120 L/day it covers pools up to 60 m² and rooms of 110–240 m² — public indoor pools, aqua parks, large hotel SPA and wellness halls, food production and commercial archives.

It combines moisture control with UV treatment that reduces airborne bacteria, a 5-in-1 air-quality sensor and Modbus RTU BMS integration, held stable by a Full Inverter system.

Public pools · Aqua parks · Large hotel SPA · Food production · Commercial archives

KEY FEATURES

- **Full Inverter system** — inverter compressor + EC fan + EEV modulate to hold stable RH
- **Hot Gas Defrost** — 3-minute defrost — dehumidification continues without a 20–30 min stop
- **5-in-1 air quality sensor** — CO_2 · PM2.5 · TVOC · RH · T°
- **E-Coating heat exchanger** — electrochemical anti-corrosion coating for chlorinated pool air
- **UV Steriliser + Anion** — reduces airborne bacteria and mould spores alongside moisture removal
- **Wi-Fi + Modbus RTU RS-485** — remote control and BMS integration

SPECIFICATIONS

Dehumidification (30 °C / 80% RH)	**120 L/day**
Supply airflow	**850–1150 m³/h**
Advised pool surface	**≤ 60 m²**
Advised room / hall size	**110–240 m²**
Operating temperature	**+5 … +42 °C**
Rated power (variable)	**900–1720 W**
Current	**4.0–7.8 A**
Voltage / Frequency	**220–230 V / 50–60 Hz**
Compressor	**Inverter**
Fan type	**EC Motor, Variable Speed**
Defrost system	**Hot Gas Defrost**
Noise level at 1 m	**< 36 dB(A)**
Heat exchanger coating	**E-Coating**

Air purification	**UV Steriliser + Anion**
Air quality sensor	**5-in-1: CO_2 · PM2.5 · TVOC · RH · T°**
Filtration	**G4 washable filter**
Refrigerant	**R-32 × 650 g**
Water protection	**IPX4**
Connectivity	**Wi-Fi + Modbus RTU RS-485**
Installation	**Wall mount (bracket incl.) / Floor**
Dimensions (L×W×H)	**1170 × 304 × 741 mm**
Net weight	**80 kg**
Gross weight	**95 kg**
Condensate drain connection	**Ø 15 mm**
Electrical protection class	**Class I**
Board protection	**Composite compound on control board**

DIMENSIONS & VIEWS

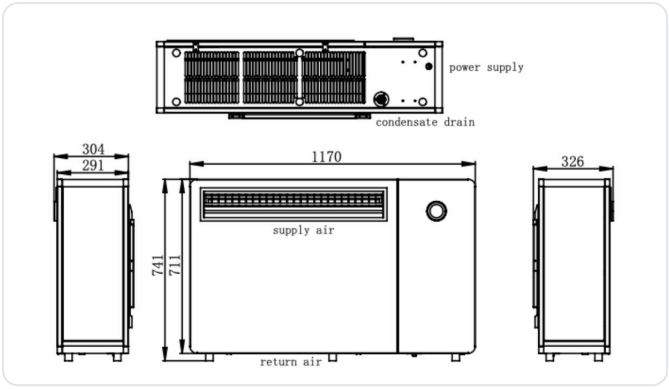

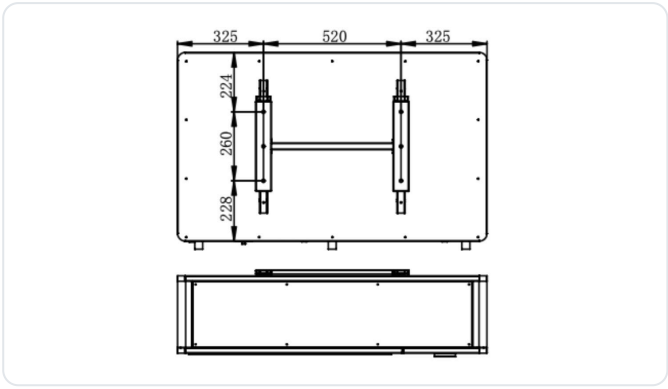

Dimensions in mm. Views: plan view with power supply and condensate drain connections, side view, front view with supply-air louvre and return-air grille, side view with wall bracket. Rear view: wall-bracket mounting points (spacing in mm); bottom view.

UNIT L×W×H	NET / GROSS WEIGHT	ADVISED POOL / ROOM	CONDENSATE DRAIN
1170 × 304 × 741 mm	**80 kg / 95 kg**	**≤ 60 m² / 110–240 m²**	**Ø 15 mm**

SCOPE OF SUPPLY

- Wall/floor dehumidifier unit — washable G4 filter fitted; UV steriliser, anion generator, 5-in-1 sensor, Wi-Fi and Modbus RTU RS-485 integrated; factory refrigerant charge (R-32)
- Wall bracket and six adjustable floor feet
- Digital controller

INDICATIVE COVERAGE

Pools up to 60 m² · rooms 110–240 m² — guide value for typical conditions; size by moisture load for basements, pools and process applications.

INSTALLATION & CONNECTIONS

Mounting	Wall mounting with the supplied bracket or floor installation on six adjustable feet — the same unit, two options. Keep the front grille and top louvre free; all service is carried out through the front panel with the unit in place.
Condensate drain	Ø 15 mm drain connection; connect to a drain line with continuous fall.
Electrical supply	220–230 V, 1-phase, 50–60 Hz. Dedicated circuit with circuit breaker and residual-current protection sized per local code; connection by a certified electrician. IPX4 and composite-coated control board for pool environments.
Control & BMS	Digital controller with 5-in-1 sensor readings and setpoints. Modbus RTU RS-485 for BMS/SCADA; Wi-Fi for app control.
Service	Washable G4 filter accessible from the front; UV lamp and anion generator inside the airflow path.

MORE VIEWS









DEH-WP SERIES — MODEL RANGE

Parameter	DEH-800WP	DEH-1200WP
Dehumidification (30 °C / 80% RH)	80 L/day	**120 L/day**
Supply airflow	500–800 m³/h	**850–1150 m³/h**
Advised pool surface	≤ 35 m²	**≤ 60 m²**
Advised room / hall size	80–130 m²	**110–240 m²**
Rated power (variable)	820–1260 W	**900–1720 W**
Current	3.7–5.7 A	**4.0–7.8 A**
Refrigerant	R-32 × 460 g	**R-32 × 650 g**
Net weight	75 kg	**80 kg**

Specifications, dimensions and drawings are subject to change without notice and may differ from the delivered unit; verify critical dimensions against the installation manual before design work. Dehumidification capacity measured at 30 °C / 80% RH.