DEH-K SERIES · INDUSTRIAL STATIONARY DEHUMIDIFIERS

DanVex DEH-2K 220 V

Stationary industrial dehumidifier · 240 L/day · Full Inverter · 1-phase · R-32



Stationary industrial dehumidifiers for permanent installation where humidity control is part of the building or process specification — manufacturing sites, large warehouses and logistics hubs, food and pharmaceutical production, and indoor cultivation.

Vertical top-discharge airflow distributes dry air evenly throughout the room volume and reaches the upper layers where moisture collects, while the inverter compressor and fan modulate output to match the load — cutting running costs in large spaces.

Manufacturing · Large warehouses · Food production · Pharmaceutical · Logistics & distribution · Indoor cultivation

KEY FEATURES

- **Full Inverter system** — matches output to real load; up to 40% energy saving, no humidity spikes
- **Top-discharge airflow** — reaches the upper room volume; connects straight to overhead ducting
- **UV Steriliser + Anion Generator** — reduces airborne bacteria, mould spores and pathogens
- **E-Coating heat exchanger** — anti-corrosion layer; resists acids, brines, chlorinated agents
- **5-in-1 air quality sensor** — CO_2 · PM2.5 · TVOC · RH · T°
- **Wi-Fi + Modbus RTU RS-485** — app control and BMS/SCADA integration on every model

SPECIFICATIONS

Dehumidification	**240 L/day**
Supply airflow	**2800–3200 m³/h**
External static pressure	**200 Pa**
Operating temperature	**+5 … +38 °C**
Working humidity range	**30–100% RH**
Voltage / Frequency	**220–230 V 1-phase / 50–60 Hz**
Compressor	**Inverter, R-32**
Fan system	**Smart-Inverter EC (0–100%)**
Heat exchanger protection	**E-Coating**
Defrost system	**Hot Gas Defrost**
Air quality sensor	**5-in-1 (CO_2/PM2.5/TVOC/RH/T°)**
Air purification	**UV Steriliser + Anion**

Filtration	**G4**
Rated power (variable)	**3040–4200 W**
Current	**4.6–6.3 A**
Refrigerant	**R-32 × 1100 g**
Noise level at 1 m	**36–42 dB(A)**
Water protection	**IPX4**
Dimensions (L×W×H)	**754 × 540 × 1620 mm**
Package size (L×W×H)	**—**
Net weight	**110 kg**
Gross weight	**—**
Condensate drain connection	**Ø 32 mm**
Connectivity / BMS	**Wi-Fi + Modbus RTU RS-485**

DIMENSIONS & VIEWS

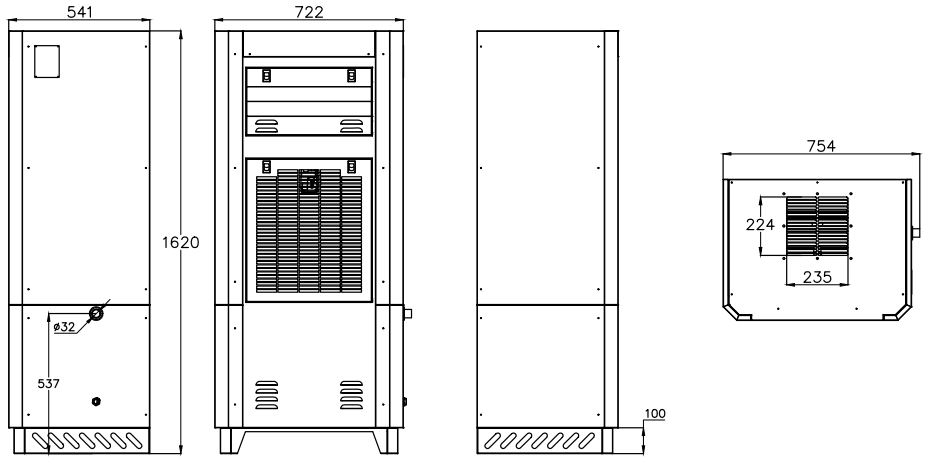

Dimensions in mm. Views: side panel with Ø32 condensate drain, front view with return-air intake, side view, plan view with top supply-air outlet.

UNIT L×W×H	NET WEIGHT	CONDENSATE DRAIN
754 × 540 × 1620 mm	**110 kg**	**Ø 32 mm**

SCOPE OF SUPPLY

- Stationary dehumidifier unit — G4 filter fitted; UV steriliser, anion generator, 5-in-1 sensor, Wi-Fi and Modbus RTU RS-485 integrated; factory refrigerant charge (R-32)
- Electronic controller with built-in humidity sensor
- Remote control module

INSTALLATION & CONNECTIONS

Mounting	Floor-standing unit for permanent installation in production halls, warehouses and process areas; place on a level floor with free space in front of the intake grille and above the top outlet.
Air distribution	Top vertical discharge distributes dry air through the upper zone of high rooms and avoids short-circuiting to the intake. The top outlet can be connected to ductwork for distribution to several zones.
Condensate drain	Ø 32 mm drain connection on the side panel; connect to a drain line with continuous fall.
Electrical supply	220–230 V, 1-phase, 50–60 Hz. Dedicated circuit with circuit breaker sized per model current and local code; connection by a certified electrician.
Control & BMS	Electronic controller with built-in humidity sensor or remote control module (both included). Modbus RTU RS-485 for BMS/SCADA; Wi-Fi for app control.
Service	Filter access through the front panel; G4 filter cleaned or replaced per the manual.

DEH-K SERIES — MODEL RANGE

Parameter	DEH-2K 380 V	DEH-2K 220 V	DEH-3K	DEH-5K	DEH-10K
Dehumidification	200 L/day	**240 L/day**	300 L/day	500 L/day	1000 L/day
Supply airflow	2500 m³/h	**2800–3200 m³/h**	2800–3500 m³/h	4800–5300 m³/h	9500–12000 m³/h
External static pressure	200 Pa	**200 Pa**	200 Pa	250 Pa	300 Pa
Voltage / Frequency	380–415 V 3-phase / 50–60 Hz	**220–230 V 1-phase / 50–60 Hz**	380–415 V 3-phase / 50–60 Hz	380–415 V 3-phase / 50–60 Hz	380–415 V 3-phase / 50–60 Hz
Compressor	R-32	**Inverter, R-32**	Inverter, R-32	Inverter, R-32	Inverter, R-32
Fan system	Step-Control AC (multi-speed)	**Smart-Inverter EC (0–100%)**	Smart-Inverter EC (0–100%)	Smart-Inverter EC (0–100%)	Smart-Inverter EC (0–100%)
Heat exchanger protection	Blue Fin	**E-Coating**	E-Coating	E-Coating	E-Coating
Rated power (variable)	4000 W	**3040–4200 W**	3260–4930 W	6080–9224 W	18500–21130 W

Specifications, dimensions and drawings are subject to change without notice and may differ from the delivered unit; verify critical dimensions against the installation manual before design work. Dehumidification capacity measured at 30 °C / 80% RH.